Focus on UHF Special Tag

BACHDUY TECHNOLOGY CO., LTD
www.bachduy.com; sales@bachduy.com
Whatsapp/Wechat/Tel: (+84) 908 867 674

Functional Specifications:

RFID Protocol:	EPCglobal and ISO 18000-63 compliant, Gen2v2 compliant
Frequency:	840MHz to 940MHz
IC type:	Impinj Monza R6-P
Memory:	EPC128bits , USER64bits, TID96bits
Write Cycles:	100,000times
Functionality:	Read/write
Data Retention:	Up to 50 Years
Applicable Surface:	Metal Surfaces
Read Range : (Fix Reader)	10.0m, US(902-928MHZ), On Metal; 7.5m, EU(865-868MHZ), On Metal;
Read Range : (Handheld Reader)	5.0m, US(902-928MHZ), On Metal; 4.5m, EU(865-868MHZ), On Metal.
Reading range when embedded 5cm depth in concrete: (Fix Reader)	4.0m, US(902-928MHZ) 4.5m, EU(865-868MHZ)
Reading range when embedded 5cm depth in concrete: (Handheld Reader)	1.5m, US(902-928MHZ) 2.1m, EU(865-868MHZ)
Reading range when embedded 10cm depth in concrete: (Fix Reader)	2.0m, US(902-928MHZ) 3.0m, EU(865-868MHZ)
Reading range when embedded 10cm depth in concrete: (Handheld Reader)	0.8m, US(902-928MHZ) 1.2m, EU(865-868MHZ)
Warranty:	1 Year

Physical Specification:

Size:	51.0x47.0mm
Thickness:	10.0mm, (Hole:D5mm)
Mounting Methods:	Screw, Rivet, Adhesive
Weight:	23.5g
Material:	Engineering plastics

REACH COMPLIANT RoHS COMPLIANT CE

BACHDUY TECHNOLOGY CO., LTD
www.bachduy.com; sales@bachduy.com
Whatsapp/Wechat/Tel: (+84) 908 867 674

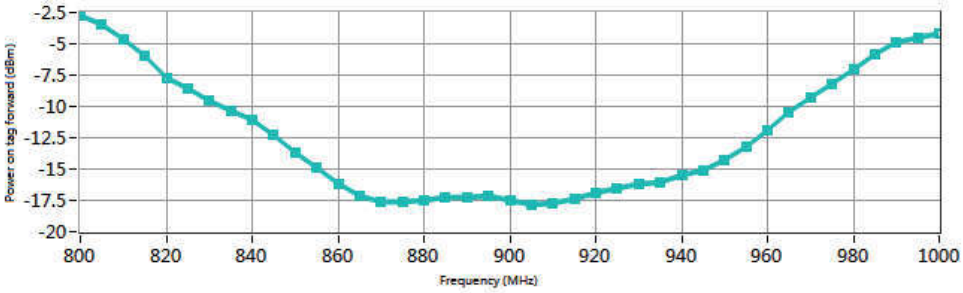

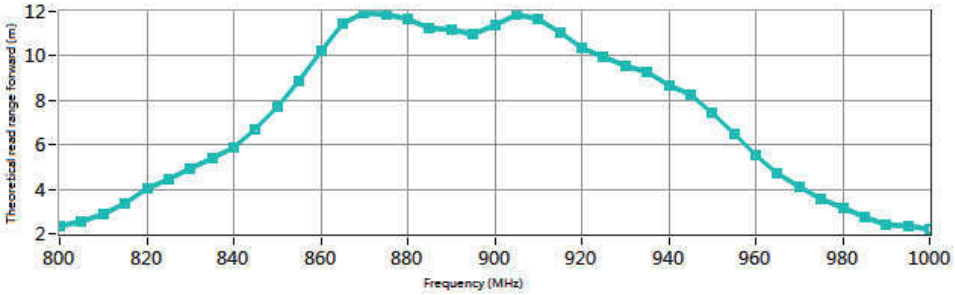

Dimensions:

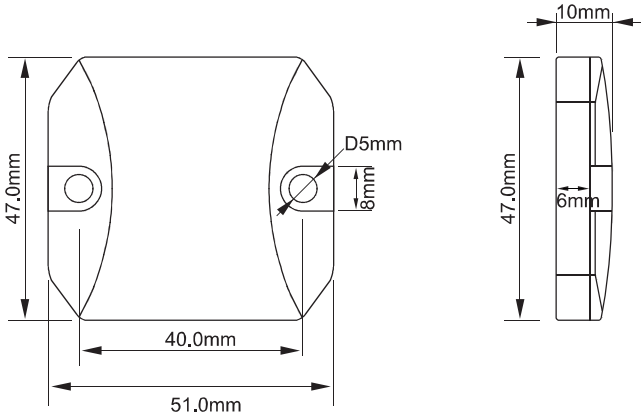

Environmental Specification:

IP Rating:	IP68
Storage Temperature:	-40°C to +85°C
Operation Temperature:	-40°C to +85°C
Certifications:	Reach Approved, RoHS Approved, CE Approved